SYSTEMY AN-KOM ODGROMOWE

TECHNICAL DATA SHEET

HOLDERS ROOF TILE adjustable straight holder — E194560

MATERIAL:
hot galvanised steel

DESCRIPTION:
Tile holder – adjustable, straight, used to build air terminals and lightning conductors on the roof across the tile. The holder is installed by bending the notch and inserting the holder between the tiles or screwing it to the batten with screws through the mounting holes.

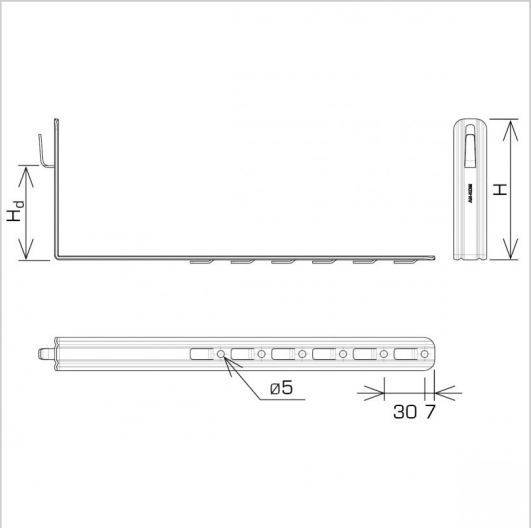

symbol type	E194560 AN-20K/OG/-N
L(mm)	420
H(mm)	124
Hd(mm)	90
cable(mm)	Ø8
material	hot galvanised steel

AN-KOM 2 Sp. z o.o.
Inwałd, ul. ks. Władysława Bukowińskiego 15
34-120 Andrychów

an-kom.pl
sales@an-kom.pl

tel./fax
+48 605 527 132